MICA MLC FAST CHARGER TECHNICAL DATA

MODEL	MLC FAST CHARGER
Product description	Minus delta V fast charger **Made in Finland by Mica Elektro Oy Ltd.**
Apparatus standard	EN 50155
EMC Certification	Directives 72/245/EEC, 95/54/EC Cert. No. e17*72/245*95/54*0108*00
Enclosure	High impact Nylon/Aluminium
Input voltage	12 … 24VDC
Charging temperature	+10°C …+40°C
Fast charge current	750mA
Trickle charge current	100mA
Recharge time	2h 30min ML-600, ML-800 ATEX 1h 45min ML-601, ML-602
LED functions	Red LED power ON Yellow LED constant fast charge ON Green LED constant fully charged
Ingress protection	IP 20
Weight	170 g
Dimensions	142 x 83 x 72 mm
Mounting	Wall mounted vertical or horizontal
Compatible handlamp	ML-600, ML-601, ML-602, ML-800 ATEX
Charging features	Sophisticated charge and battery protection: Minus delta V cut-off Vmax Cut-off at 7,8V Maximum time cut-off after 4 hrs
Accessories	**IL-2** mains adapter **CR-15** power supply for max. 10 MLC chargers **IL-5** changeover unit from car battery Cigarette lighter cable

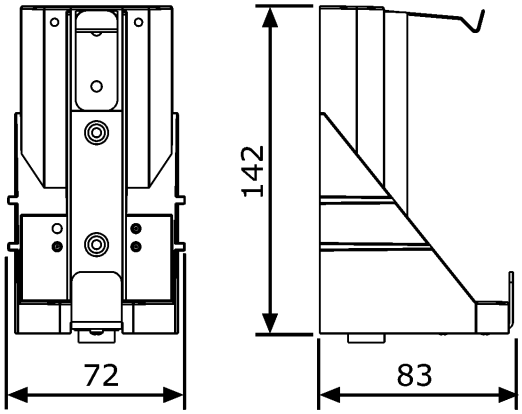

Mica Elektro Oy Ltd. Tel. +358-9-5617 666 Fax +358-9-5617 6688
Finland info@mica.eu www.mica.eu