LITHIUM BATTERY

CR-V3

(MODEL NO. CR-V3)

SPECIFICATION

ISSUANCE
FEB. 19. 2003
MBI

Dec.13,2002

Stipulated	Checked	Described

MATSUSHITA BATTERY INDUSTRIAL CO.,LTD.
LITHIUM & MICRO BATTERY BUSINESS UNIT

1. Nominal Specification

1-1 Model Number : CR-V3/BE (Bare cell CR14500)

1-2 Nominal Voltage : 3 V

1-3 Nominal Capacity : 3300 mAh

(Nominal capacity is based on the standard discharge current and cut-off voltage 2.0V at 20℃)

1-4 Standard discharge current : 200 mA

1-5 Maximum continuous discharge current : 2000 mA at 20℃

1-6 Dimensions : The attached Drawing

1-7 Mass : Approx. 39 g

1-8 Appearance : There shall be no noticeable deformation.

1-9 Temperature : Operation -20 to 60℃

: Storage -20 to 45℃

2. Characteristics

2-1 Open Circuit Voltage : Between 3.0V and 3.4V

(The measuring method described item 4-4.1)

2-2 Impedance : Max. 0.5Ω

(The measuring method described item 4-4.2)

2-3 Duration

Pulse discharge cycles : ≧ 1900 cycles at 20℃

≧ 900 cycles at -20℃

(Pulse condition described item4-4.3 ; Pulse current 1800mA, 3sON/27sOFF Cycle Cut-off Voltage,1.55V at 20℃ and 1.20V at -20℃)

2-4 Vibration resistance : Deterioration of performance(2-1,2-2,2-3) shall not occur after the test described in item 4-4.4.

2-5 Leakage resistance : The battery shall not show leakage or salting which harms the performance(2-1,2-2,2-3)after Heat Cycle test described in item 4-4.5.

2-6 High Temperature Storage : The battery shall not show leakage or salting after High Temp.storage described in item 4-4.6.

2-7 Storage Performance : 90% of initial performance (2-3 at 20℃) shall be obtained for 5 years. (Storage at 25±5℃)

3. Test Condition

3-1 Test condition : Unless otherwise specified Test shall be carried out at
Temperature ; 25±5℃
Humidity ; 65±10%RH

3-2 Test Timing : The test shall be started within a month from delivered day.

3-3 Measuring Instrument

3-3.1 Volt Meter : Input impedance ; ≧ 10MΩ
Accuracy ; ≦ 0.5%

3-3.2 Battery Impedance Meter : Sine-wave AC method (1kHz , 0.1mA)
(HEWLETT PACKARD MULTIMETER [34401A] is recommended)

3-3.3 Caliper : Accuracy ; ≦ 1% by JIS

3-3.4 Balance : sensitivity ; ≦ 100 mg

4. Measuring Method

4-1 Dimensions : This shall be measured with the Caliper described in item 3-3.3.

4-2 Mass : This shall be measured with the Balance described in item 3-3.4.

4-3 Appearance : Deformation or tarnish shall be visually checked.

4-4 Characteristics

4-4.1 Open circuit Voltage : This shall be measured with the volt meter described in item 3-3.1.

4-4.2 Impedance : This shall be measured with the impedance meter described in item 3-3.2.

4-4.3 Duration : This shall be measured by the Pulse discharge method.
The condition is

Test Temperature	20±2℃,-20±2℃
Pulse current	1800mA
Pulse cycle	3secON / 27secOFF

Cut-off Voltage 1.55V at 20℃
1.20V at -20℃

4-4.4 Vibration Test : This test shall be carried out by the following condition,
Amplitude ; 2mm
Frequency ; 16.7Hz
Directions ; X,Y,Z
Duration ; 90 minutes
(30minutes in each direction)

4-4.5 Heat cycle Test : The battery shall be carried out the Heat cycle Test according to MIL-STD-202G-106G. After 10 cycles of Heat cycle, the battery shall be kept in dry place.
Then leakage, appearance and dimensions shall be checked.

4-4.6 High Temp. Storage : The battery shall be stored at 60℃ for 28 days. After the storage, the battery shall be kept in dry place at 25±5℃ during 4hours, then leakage and appearance shall be checked.

4-4.7 Storage : The battery shall be stored at 25±5℃ (humidity during storage shall be less than 70%RH.) for 5 years (No condensation). After the storage, the battery shall be carried out Duration test described in item 4-4.3.

5. PTC(Positive Temperature Coefficient) Device Performance
PTC device is installed in the battery for Safety

5.1 Appearance : There shall be no noticeable deformation and/or scraches.

5.2 Resistance : The resistance shall be between 10 to 70 mΩ (no load)
When 5A flows, the resistance shall be more than 10Ω within 80 seconds.

6. Date code system

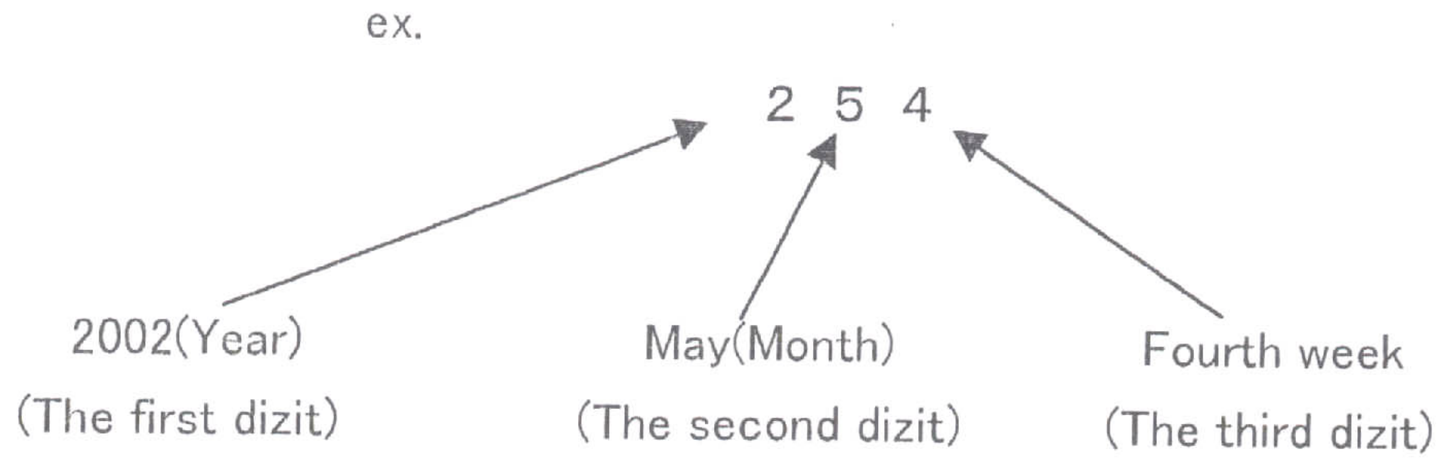

October ··· O
November ··· Y
December ··· Z

7. UL Standard : CR-V3 is complied by UL1642(File No.12210)

8. Precautions for use

1) A battery shall not be stored at temperatures in excess of 45℃. Storage at less than 30℃ is recommended. Storage at less than -20℃ can deform the plastic parts and may cause a leakage. To prevent self-discharge caused by corrosion or decrease of insulation, humidity during storage shall be less than 70%RH.
2) The battery has an explosion resistant construction. But the following cautions should be taken, because combustible materials such as lithium metal and organic electrolyte are contained in the battery.
   * Do not short circuit.
   * Do not dispose in fire.
   * Do not charge.
   * Do not disassemble.
3) Keep away from heat source or flame.
4) The battery shall not be washed by ultrasonic wave washer.

Symbol	Date	Revision	Signed	Checked

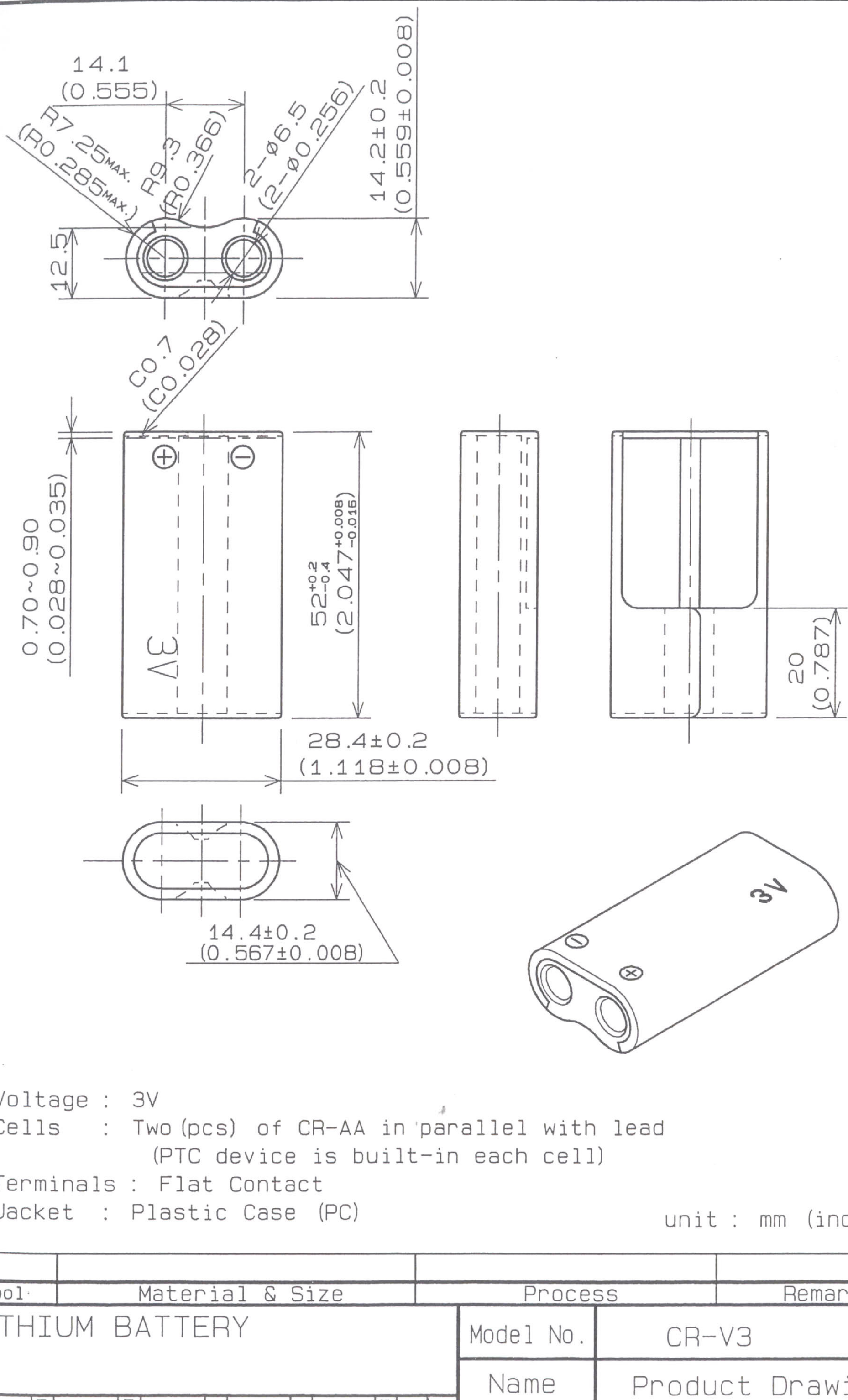

Voltage : 3V
Cells : Two (pcs) of CR-AA in parallel with lead
(PTC device is built-in each cell)
Terminals : Flat Contact
Jacket : Plastic Case (PC)

unit : mm (inch)

Symbol	Material & Size	Process	Remark

LITHIUM BATTERY

Model No.	CR-V3
Name	Product Drawing
No.	010718

Scale	Designed	Reviewed	Checked	Checked	Approved
1: 1	Jan.29.01	Jan.29.'01			

MATSUSHITA BATTERY INDUSTRIAL CO., LTD.